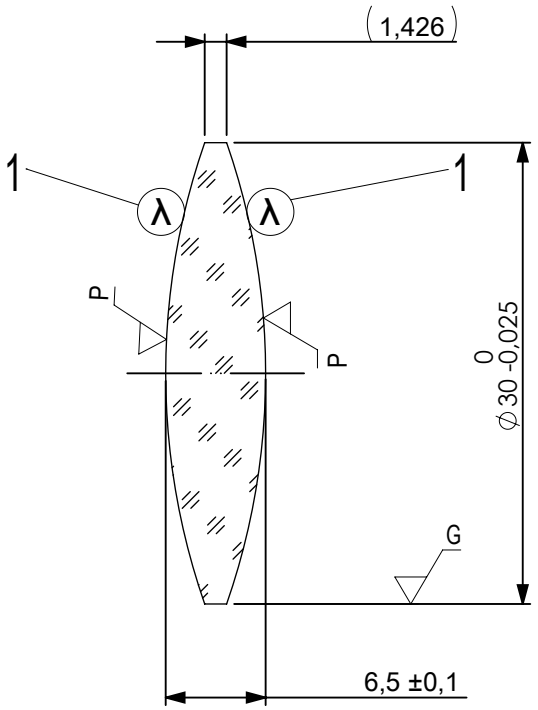

FOCAL LENGTH (EFL): 30 ±0,3

BACK FOCAL LENGTH (BFL): 28,12

1 AR COATING: VIS-EXT
R(AVG) ≤ 0,5% FROM 350-700nm @ 0° AOI

LEFT SURFACE	MATERIAL	RIGHT SURFACE
R 45,61±0,046 CX	GLASS N-SF11 785/258	R 45,61±0,046 CX
Øe 29		Øe 29
3/ 3 (0,5) λ=632,8 nm		3/ 3 (0,5) λ=632,8 nm
4/ -		4/ 1,27'
5/ 40 - 20 (MIL-PRF-13830B)		5/ 40 - 20 (MIL-PRF-13830B)
6/ -		6/ -

PROTECTIVE CHAMFERS AS NEEDED	FIRST ANGLE PROJECTION	Edmund Optics®
ROHS: COMPLIANT / SCALE: NONE / λ = 587,6nm		
SPECIFICATIONS SUBJECT TO CHANGE WITHOUT NOTICE. DIMENSIONS ARE FOR REFERENCE ONLY		TITLE: 30mm Dia, x 30mm FL, VIS-EXT Coated, Double-Convex Lens
FOR INFORMATION ONLY: DO NOT MANUFACTURE PARTS TO THIS DRAWING	ALL DIMS IN: mm	
INDICATIONS IN ACCORDANCE WITH ISO 10110		DWG NO: 89187 / SHEET SIZE: A4 / SHEET 1 OF 1