NOTES:

1. SUBSTRATE:
   II-VI Infrared ZnSe
2. CENTERING TOLERANCE:
   EDGE THICKNESS VARIATION MEASURED AT THE CLEAR APERTURE OF S1
   NOT TO EXCEED 12.7µm
3. COATING (APPLY ACROSS COATING APERTURE)
   BBAR (8000-12000nm)
   S1 & S2: R(AVG) <0.5% @ 8 - 12µm
4. FINE GROUND SURFACE
5. POWER, IRREGULARITY, AND SURFACE QUALITY SPECIFICATIONS APPLY ACROSS CLEAR APERTURE
6. WAVELENGTH RANGE: 3000 - 12000nm
7. SURFACE ROUGHNESS: <50 Å
8. ROHS: COMPLIANT

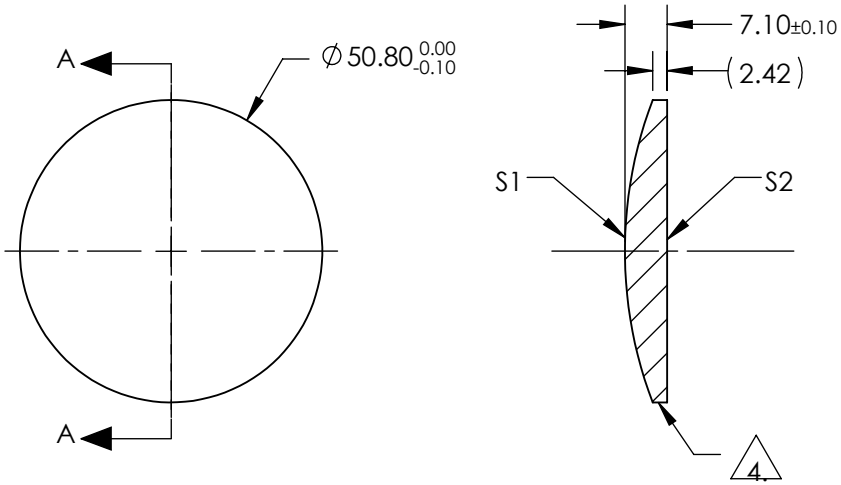

SECTION A-A

FOR INFORMATION ONLY:
DO NOT MANUFACTURE PARTS TO THIS DRAWING

SPECIFICATIONS SUBJECT TO CHANGE WITHOUT NOTICE
DIMENSIONS ARE FOR REFERENCE ONLY

	S1	S2
SHAPE	CONVEX	PLANO
RADIUS	71.260	INFINITY
SURFACE QUALITY	40-20	40-20
CLEAR APERTURE	90%	90%
POWER at 10.6µm	λ/10	λ/10
IRREGULARITY at 10.6µm	λ/20	λ/20
BEVEL	PROTECTIVE AS NEEDED	PROTECTIVE AS NEEDED

EFL (AT 10.6 microns)	50.80
BFL (AT 10.6 microns)	47.85
THIRD ANGLE PROJECTION	
ALL DIMS IN	mm

Edmund Optics®

TITLE	50.8mm Dia. x 50.8mm FL, 8-12µm BBAR Coated, ZnSe Plano-Convex Lens
DWG NO	11408
SHEET	1 OF 1